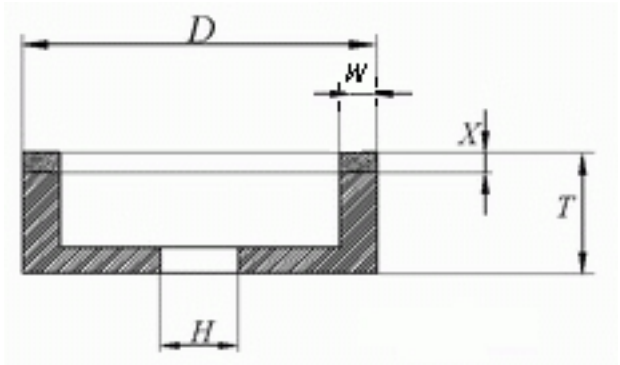

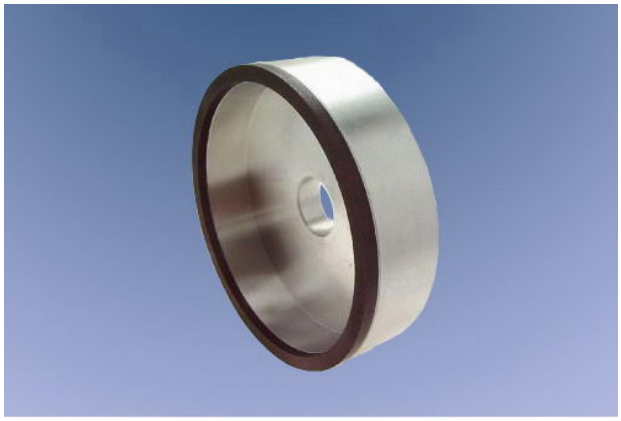

meules cupules

(meules cupules)
Code:6A2(B)
Liant:B.M(S.Q)

Taille (mm)

Diamond/CBN Content (carat/piece)		
D		
T		
H		
W		
X		
50		
75		
100		
50		
19		

10

3

2

1.95

2.92

3.90

50

20

10

3

3

2.92

4.39

5.85

50

21

10

3

4

3.90

5.85

7.80

50

23

10

3

6

5.85

8.77

11.70

50

19

10

5

2

3.11

4.67

6.22

50

20

10

5

3

4.67

7.00

9.33

50

21

10

5

4

6.22

9.33

12.44

50

23

10

5

6

9.33

14.00

18.66

75

19

10;20

6

2

5.72

8.58

11.45

75

20

10;20

6

3

8.58

12.88

17.17

75

21

10;20

6

4

11.45

17.17

22.89

75

23

10;20

6

6

17.17

25.75

34.34

80

24

20

6

2

6.14

9.21

12.27

80

25

20

6

3

9.20

13.79

18.40

80

26

20

6

4

12.27

18.41

24.54

80

28

20

6

6

18.41

12.44

36.82

100

31

20

10

2

12.44

18.66

24.88

100

32

20

10

3

18.66

24.88

37.32

100

33

20

10

4

24.88

37.32

49.76

100

35

20

10

6

37.32

8.29

74.64

125

31

32

5

2

8.29

12.44

16.59

125

32

32

5

3

12.44

16.59

24.88

125

33

32

5

4

16.59

24.88

33.18

125

35

32

5

6

24.88

15.90

49.76

125

31

32

10

2

15.90

23.85

31.79

125

32

32

10

3

23.85

31.79

47.69

125

33

32

10

4

31.79

47.69

63.59

125

35

32

10

6

47.69

19.35

95.38

150

31

32

10

2

19.35

29.03

38.70

150

32

32

10

3

29.03

38.70

58.06

150

33

32

10

4

38.70

58.05

77.41

150

35

32

10

6

58.05

87.09

116.12